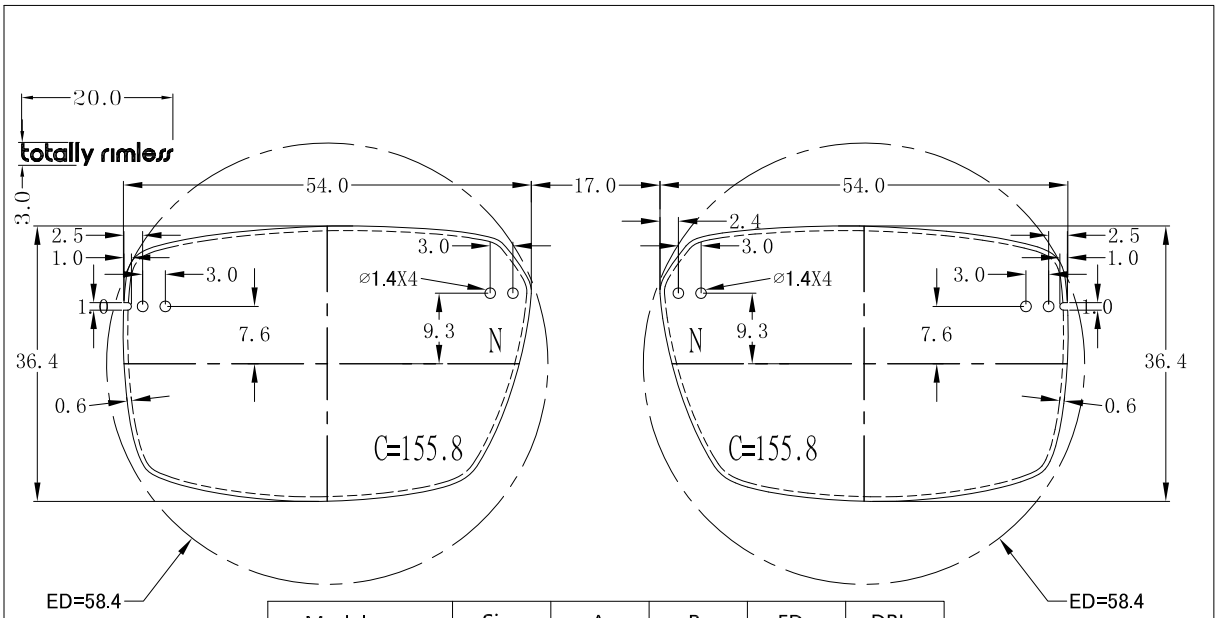

Model	Size	A	B	ED	DBL
TR 314 Intercept	54.0	54.0	36.4	58.4	17.0