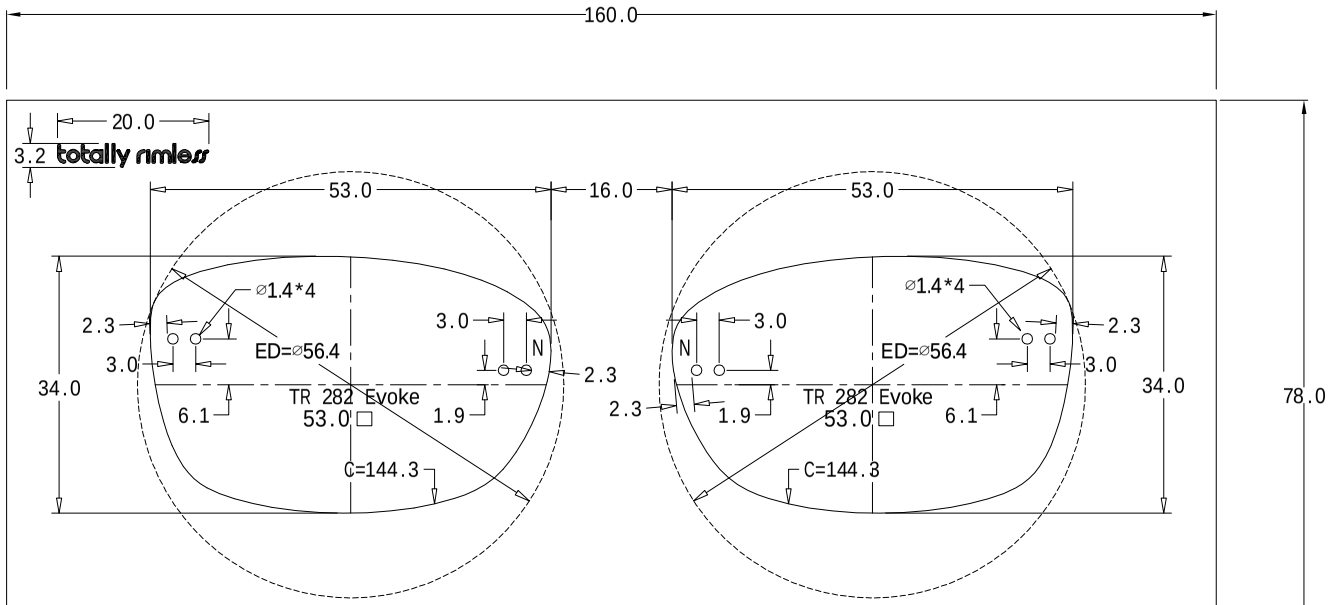

Model	Size	A	B	ED	DBL
TR 282 Evoke	53.0	53.0	34.0	56.4	16.0

Match ⟨ TR 280 Explore
TR 281 Explore
TR 284 Inspire
TR 286 Imagine
TR 285 Inspire
TR 287 Imagine ⟩ Temple