TR-196

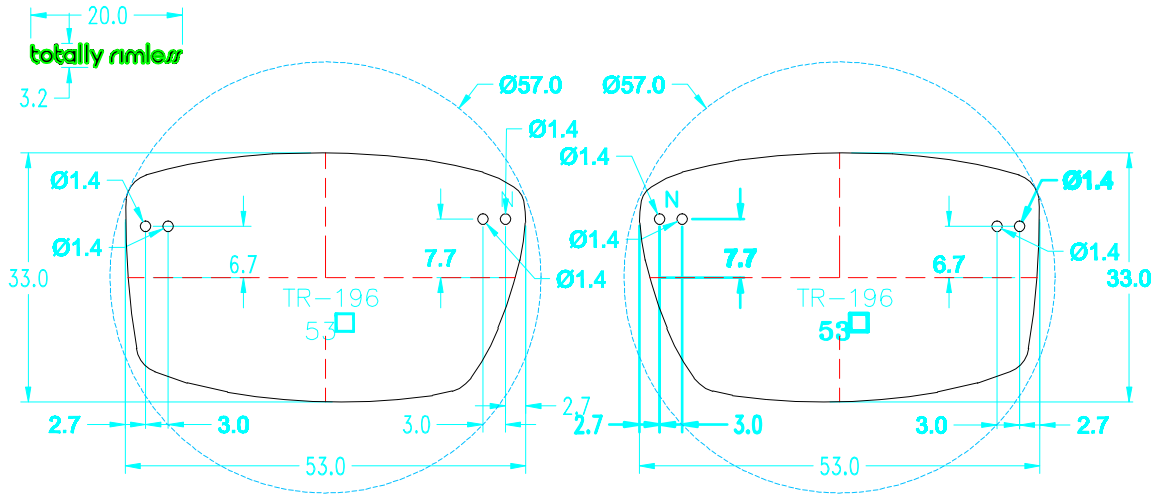

Model	Size	A	B	ED	DBL
TR-196	53	53.0	33.0	57.0	17.0